NORTHERN WOLVES AIR CONDITIONING

SUBMITTAL TRANSMITTAL

Project:	Saddle River Day School	**Submittal No:**	032
Location:	147 Chestnut Ridge Rd., Saddle River, NJ 07458	**Spec Section:**	230548
Engineer:	Johnson & Urban, 295 Route 34 Colts Neck, NJ 07722	**Date:**	03/22/2026
Architect:	DIGroup Architecture	**Project No:**	DIG #22.036

EQUIPMENT/MATERIAL SUBMITTED:

Insulated roof curbs for rooftop equipment including RTUs, exhaust fans, and pipe/duct penetrations. Prefabricated galvanized steel construction with rigid insulation, cant strips, and wood nailer per roofing requirements.

Product	Type	Material	Standard
TC-3 Insulated Curb	Equipment Curb	Galv Steel 16 Ga	ASTM A653
Pipe Penetration Curb	Penetration	Galv Steel	ASTM A653
Rigid Insulation	2" Polyiso	R-13 Minimum	ASTM C1289

COMPLIANCE NOTES:

- Galvanized steel per ASTM A653/A653M, G90 coating
- Minimum 14" curb height above finished roof
- Rigid insulation R-13 minimum in curb walls
- Integral wood nailer for roofing attachment
- Cant strips per roofing manufacturer requirements
- Compliant with Section 230548 and roofing warranty requirements

NOTES:

Coordinate curb dimensions with equipment and roofing contractor. Curbs to be set and flashed before equipment installation. All curbs to have factory-applied insulation.

Submitted By: Northern Wolves Air Conditioning
Email: ruslan@northernwolvesac.com

Insulated Roof Curb

Customer: _____

Project: _____

Quote/Order No. _____

Submittal Date: _____

Single-Ply roofing. Lightweight fill or tapered insulation.

Specifications

Prefabricated roof curb to be manufactured of prime galvanized steel construction, 20, 18, 16 or 14 gauge as required, meeting ASTM A653/653M, with welded corners and with seams joined by continuous welds. Roof curb shall be internally reinforced with angles 48" on center, factory insulated with 1 ½" thick 3# density fiberglass insulation, and factory installed wood nailers. Height to be 8" above roof deck or as detailed. Top of all roof curbs shall be level, with pitch built into curb when deck slopes.

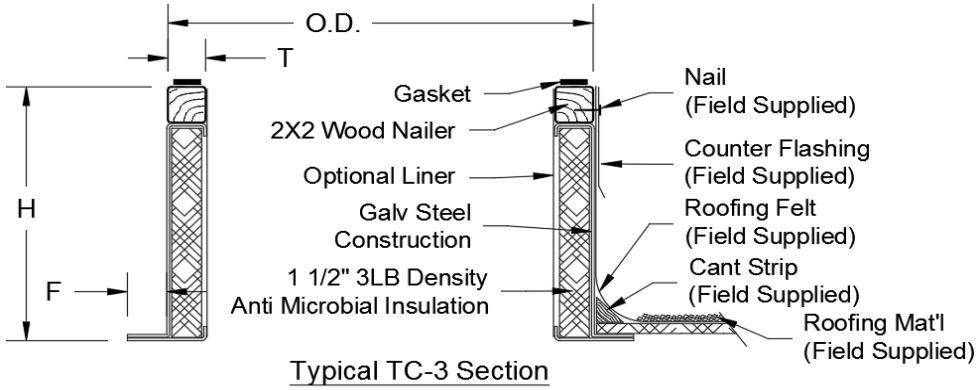

Typical TC-3 Section

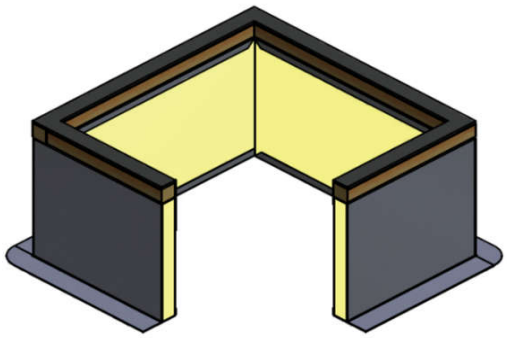

Standard Construction

Galvanized steel shell, base plate and counterflashing

Factory installed wood nailer

Internal bulkhead re-inforcement

All welded construction

Added Options

1

2

3

4

#	Qty	Width OD	Length OD	H	T	F	Pitch/12	Direction	Options	Tag

pca-1,2,5 STOCK

the pacesetter in quality prefab roof products

the pate company
245 eisenhower lane south • lombard, illinois 60148
630.705.1920 • 800.243.3018 • fax 630.705.1930
www.patecurbs.com • e-mail: sales@patecurbs.com

pate (always in stock) pipe curb assemblies

standard construction

pipe curb assembly shall consist of heavy ga. galvanized steel roof curb, unitized construction, with integral base plate, 1 1/2" insulation and 2 x 2 treated wood nailer. Unit shall be furnished with acrylic clad thermoplastic cover, fastening screws, graduated step boots with stainless steel clamps.

p.o. no. _____
customer _____
_____
project _____
location _____
_____
architect _____
engineer _____

pate pipe curb assemblies

cap styles

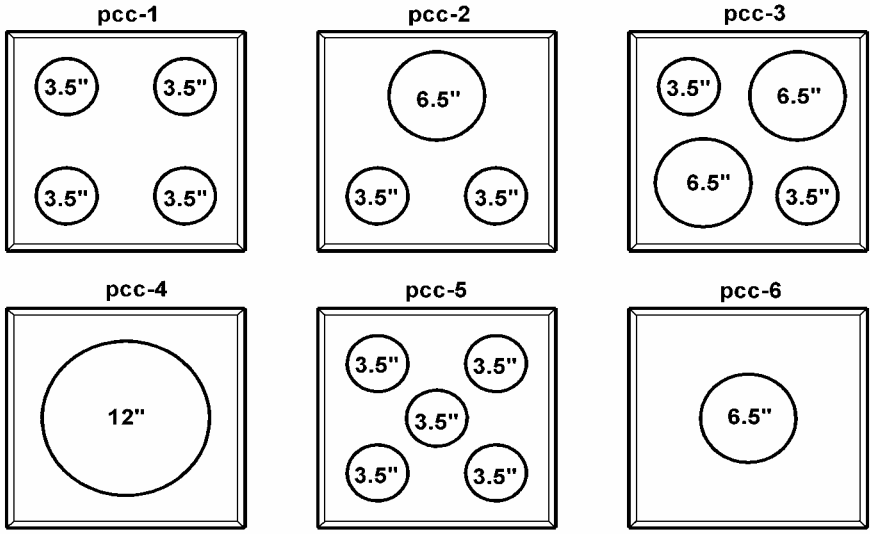

curb styles

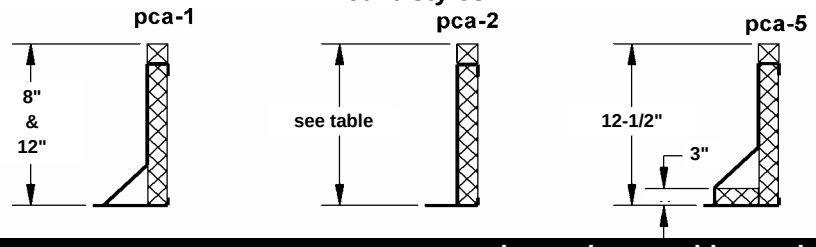

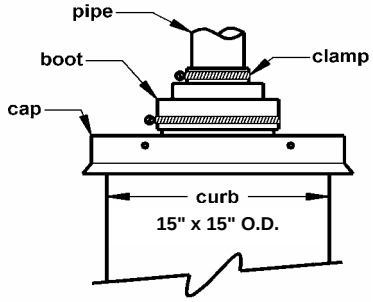

cap and boot packages

NOTE: sizes listed are actual O.D.

pcc-1 for up to 4 pipes: 1/2" - 2 7/8" O.D.
pcc-2 for up to 2 pipes: 1/2" - 2 7/8" O.D. and 1 pipe: 3" - 5 1/2" O.D.
pcc-2q6 for up to 2 pipes: 1/2" - 2 7/8" O.D. and for up to 4 pipes: 3/8" - 2" O.D.
pcc-3 for up to 2 pipes: 1/2" - 2 7/8" O.D. and for up to 2 pipes: 3" - 5 1/2" O.D.
pcc-3q6 for up to 2 pipes: 1/2" - 2 7/8" O.D. and for up to 8 pipes: 3/8" - 2" O.D.
pcc-4 for 1 pipe: 6" - 10 3/4" O.D.
pcc-5 for up to 5 pipes: 1/2" - 2 7/8" O.D.
pcc-6 for 1 pipe: 3" - 5 1/2" O.D.

pipe curb assembly requirements

quantity	curb style	height	raised cant	cap & boot pkg. pcc-
	PCA-2	12"	n/a	all in stock
	PCA-2	14"	n/a	
	PCA-2	16"	n/a	
	PCA-2	18"	n/a	
	PCA-2	24"	n/a	
	PCA-1	8"	n/a	
	PCA-1	12"	n/a	
	PCA-5	12-1/2"	3"	

b-3

1 module graduated step 3 1/2" boot for 1/2" - 2 7/8" actual O.D. pipe

b-q6

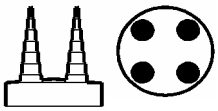

4 module graduated step 6 1/2" boot for 3/8" - 2" actual O.D. pipe

b-6

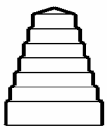

1 module graduated step 6 1/2" boot for 3" - 5" actual O.D. pipe

b-12

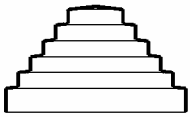

1 module graduated step 12" boot for 6" - 10 3/4" actual O.D. pipe

©2011 the pate company